Ersatz Fender Pro Vibe

Based on the EA tremolo. Q1 buffers the signal and drives frequency splitting networks to the inputs of Q2 and Q3. Q2 and Q3 are amplitude modulators like the EA. Outputs are added by two 470K's and summed into Q4. Q4 buffers the output. Q5 and Q6 vary the AC impedance on the sources of Q2 and Q3 to do the modulation.
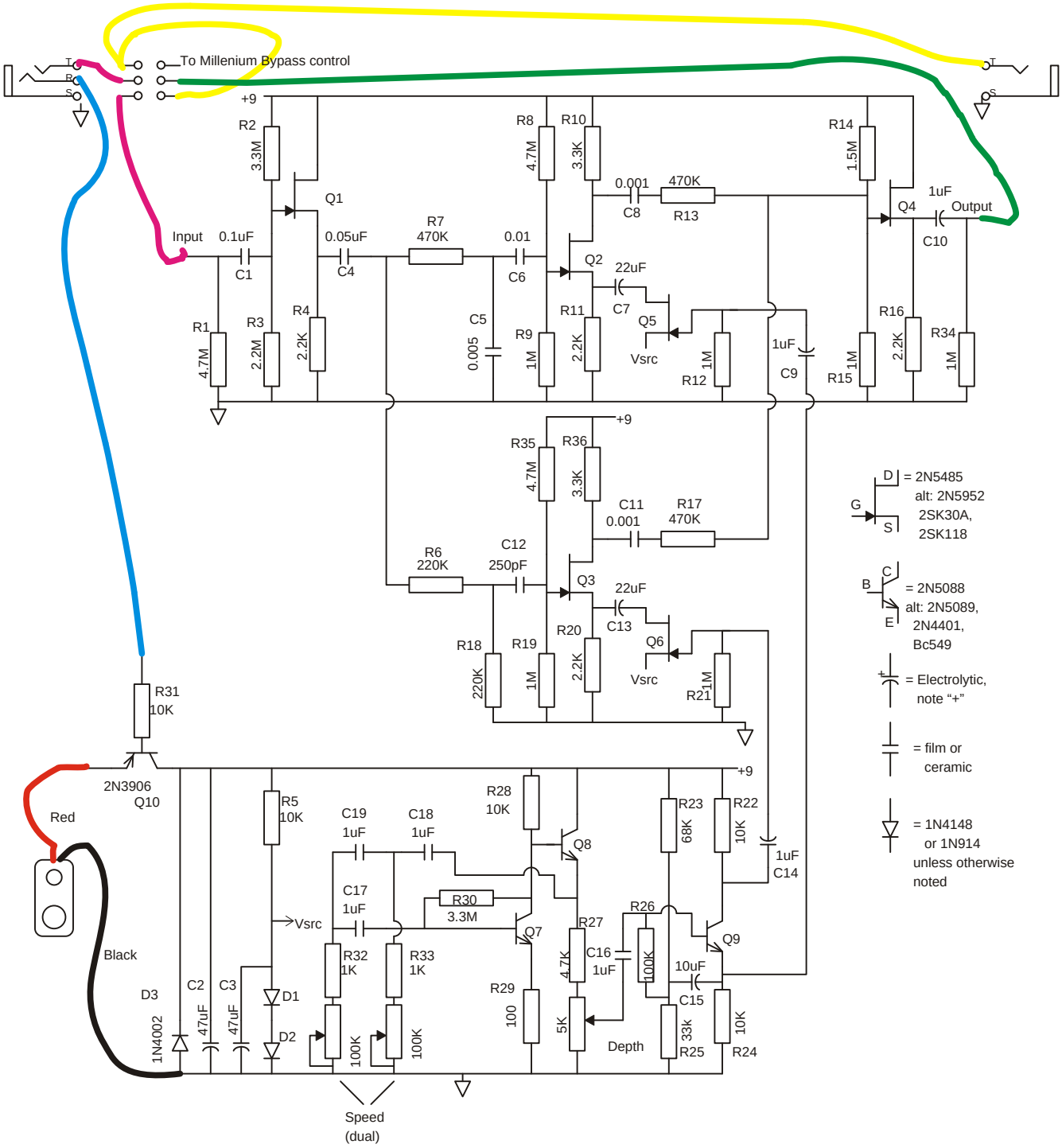
Q7 is a phase shift oscillator like the EA. Q8 buffers this from the depth control. Q9 has its input impedance bootstrapped and splits the LFO into opposing phases. Each of the phas es drives one of Q5 and Q6. The speed pot is a dual section for wider speed range in the phase shift circuit. For best operation, Q2 and Q3 should be selected for nearly the same gain, and Q5 and Q6 should be matched for Rds at 100uA. Just matching them in a JFET matching circuit similar to the one at GEO (http://www.geofex.com) should be fine. Two independent pairs is what's needed, not a matched set of four.